SYSTEMS LTD.	Project: **AHS**	#287	File: AHS Spec.doc
	Title: AHS - Specification		Doc No: 20820100-400
	Revision: C	Revision Date: 11-Jun-09	Contract No.: E000057245

AIRBORNE UNMANAGED SWITCH
BES P/N 20820100-100

Prepared By:	Uri Grayevsky	Sign:		Date:	10/082009
Apr. :	Michael Filmus	Sign:		Date:	10/082009
Q.A. :	Arie Shani	Sign:		Date:	10/082009

Revisions Table			
ECR/ECN	LTR	Description	Date
	A	Production Release	31/07/08
	B	Add Outline Drawing	11/06/09
	C	Add P/N	10/082009

Table of Contents:

Table of Figures:

List of Tables:

1. GENERAL

The AHS is airborne mission Hub Switch P/N 20820100-100.

2. APPLICABLE DOCUMENTS

Herein is a list of applicable documents for the AHS unit.
In case of discrepancy between the contents of this specification and the applicable documents, the first prevails.

2.1 Military Standards and Handbooks

MIL-STD-454	Standard general requirements for electronic equipment
MIL-STD-810E	Environmental test methods
MIL-STD-129	Marking for shipment and storage
MIL-STD-1472	Human engineering design criteria for military system equipment and facilities
MIL-STD-704D	Aircraft Electric Power Characteristics
MIL-STD-721	Definition of terms for reliability maintainability, human factors and safety
MIL-STD-461D, 462	EMI, RFI
FED-STD-595	Colors

2.1.1 BES Documents

2.2 BES Documents

3. AHS Electrical Specifications

3.1 Hardware Components

1. HUB Switch

3.2 HUB Switch General Description

1. Full IEEE 802.3 Compliance
2. 8 port 10/100Base TX Ethernet Switch
3. Unmanaged Operation
4. Support Full/Half Duplex Operation
5. Auto Sensing Speed and Flow Control
6. MDIX Auto Sensing Cable
7. Full Wire Speed Communication
8. Store-and-forward Technology
9. Compact, Space Saving Package
10. Up to 1.6 Gb/s Maximum Throughput
11. ESD Protection Diodes on Ports
12. Surge Protection Diodes on Power Inputs
13. Power Inputs (10-32 VDC)

3.3 AHS Block Diagram

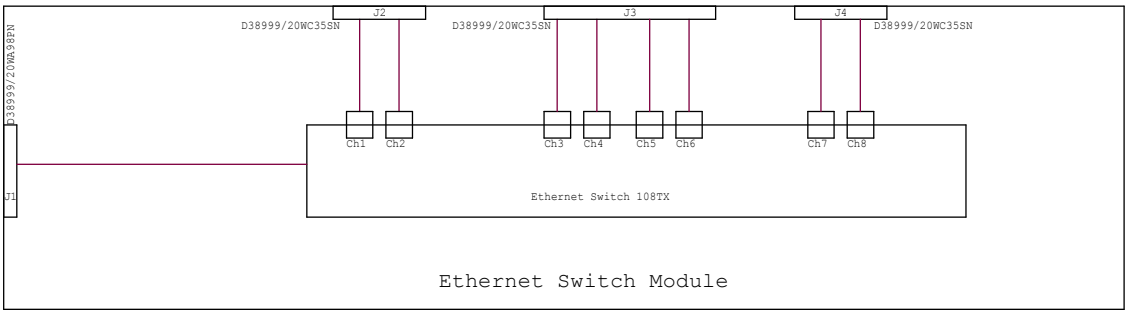

Figure 3-1: AHS Block Diagram

3.4 Reliability and Maintainability

The AHS will have MTBF of 30,000 hours at 40°C .
Mean Time To Repair (MTTR) does not exceed 30 minutes.
The MTTR includes the time required to detect and isolate the failure, and replace the failed unit, checkout the repair and return the system to full operational status.

4. ENVIRONMENTAL SPECIFICATIONS

The AHS will not be damaged or affected by the effects of ambient air temperature as follows:
Operating: The AHS shall meet performance requirements specified herein after exposure to temperatures from -40°+71°C
Non-operating: (Storage and transportation) -54°+71°C.

4.1 Relative humidity:

The AHS, in an operating or non-operating condition, shall not be affected by humidity for both continuous and intermittent periods, including conditions wherein condensation takes place in and on the equipment in the form of water.
Operating: 95% relative humidity (RH) with no condensation.
Non-operating: 95% RH.

4.2 Vibration

The AHS shall meet vibration according to MIL-STD-810F Method 514.5 per Fig. 514.5C-10 for airborne environment.

4.3 Shock

The AHS shall operate as specified herein after being subjected to operational shock according to MIL-STD 810F Method 516.5 for flight equipment 40g 11ms Saw-tooth.

4.4 Electromagnetic Interference:

The AHS shall meet the requirements of MIL-STD-461D, for CE102, CS101, RE102, RS103, with all external cabling routed with shielded cables.

4.5 Operating Altitude

The AHS shall operate as specified herein in altitudes from – 1000' to 40,000'.

CE102 Test -- Conducted Emission on Power Lines
The AHS shall withstand the requirements of conducted emission (10KHz to 10MHz) on AVC-1000 28VDC power leads.

CS101 -- Conducted Susceptibility on Power Lines
The AHS shall withstand the requirements of emissions on power lines in the 30Hz to 50KHz frequency range.

CS114 -- Conducted Susceptibility on Power Lines
Conducted susceptibility, bulk cable injection, 10 kHz to 30 MHZ
RE102 -- Electrical Field Radiated Emission.
The AHS shall withstand the requirements of the radiated emission of an electrical field in the frequency range of 100 KHz to 1.0 GHz.

RS103 --Susceptibility to Radiated Electric Field
The AHS shall withstand the requirements of the susceptibility to an electric field in the frequency range of 2MHz to 2.0 GHz.

4.6 Fungus:

The AHS shall be non-nutrient to fungus growth. And meets the requirements specified in MIL-STD-810F.

5. INTERFACE

5.1 Connector Information

REF DES.	Function	On Unit Connector Part Number	On Cable Connector Part Number	Vendor
J1	Power IN	D38999/20WA98PN	D38999/26WA98SN	General
J2	Ethernet Ch 1-2	D38999/20WC35SN	D38999/26WC35PN	General
J3	Ethernet Ch 3-6	D38999/20WC35SN	D38999/26WC35PN	General
J4	Ethernet Ch 7-8	D38999/20WC35SN	D38999/26WC35PN	General

Table 1: Connector Information

5.2 J1 - D38999/20WA98PN Pin Out

Pin	**Function**	**Remarks**
A	28V1 IN	
B	28V2 IN	
C	28V Return	

Table 2: Power Pin Out

5.3 J2 - D38999/20WC35SN Pin Out

Pin	LAN	Customer Name	REMARKS
3	+TX1	RDP ETH TXD_P (TX by RP)	STP CAT5 NETWORK CABLE
16	-TX1	RDP ETH TXD_N	
5	+RX1	RDP ETH RXD_P (TX by RP)	
4	-RX1	RDP ETH RXD_N	
11	SHIELD		
2	+TX2	RVP ETH TXD_P (TX by RP)	STP CAT5 NETWORK CABLE
15	-TX2	RVP ETH TXD_N	
1	+RX2	RVP ETH RXD_P (TX by RP)	
14	-RX2	RVP ETH RXD_N	
12	SHIELD		
6	NC		Reserved
7	NC		Reserved
8	NC		Reserved
9	NC		Reserved
10	NC		Reserved
13	SHIELD		
17	NC		Reserved
18	NC		Reserved
19	NC		Reserved
20	NC		Reserved
21	NC		Reserved
22	NC		Reserved

Table 3: Ethernet J2 Pin Out

5.4 J3 - D38999/20WC35SN Pin Out

Pin	LAN	Customer Name	REMARKS
3	+TX3	RDP ETH TXD_P (TX by Comm.)	STP CAT5 NETWORK CABLE
16	-TX3	RDP ETH TXD_N (TX by Comm.)	
5	+RX3	RDP ETH RXD_P (RX by Comm.)	
4	-RX3	RDP ETH RXD_N (RX by Comm.)	
11	SHIELD		
2	+TX4	RVP ETH TXD_P (TX by Nav)	STP CAT5 NETWORK CABLE
15	-TX4	RVP ETH TXD_N (TX by Nav)	
1	+RX4	RVP ETH RXD_P (RX by Nav)	
14	-RX4	RVP ETH RXD_N (RX by Nav)	
12	SHIELD		
7	+TX5	RDP ETH TXD_P	STP CAT5 NETWORK CABLE
6	-TX5	RDP ETH TXD_N	
9	+RX5	RDP ETH RXD_P	
8	-RX5	RDP ETH RXD_N	
13	SHIELD		
17	+TX6	RVP ETH TXD_P	STP CAT5 NETWORK CABLE
10	-TX6	RVP ETH TXD_N	
19	+RX6	RVP ETH RXD_P	
18	-RX6	RVP ETH RXD_N	
20	SHIELD		
21	NC		Reserved
22	NC		Reserved

Table 4: Ethernet J3 Pin Out

5.5 J4 - D38999/20WC35SN Pin Out

Pin	LAN	Customer Name	REMARKS
3	+TX7	RDP ETH TXD_P (TX by RP)	STP CAT5 NETWORK CABLE
16	-TX7	RDP ETH TXD_N	
5	+RX7	RDP ETH RXD_P (TX by RP)	
4	-RX7	RDP ETH RXD_N	
11	SHIELD		
2	+TX8	RVP ETH TXD_P (TX by RP)	STP CAT5 NETWORK CABLE
15	-TX8	RVP ETH TXD_N	
1	+RX8	RVP ETH RXD_P (TX by RP)	
14	-RX8	RVP ETH RXD_N	
12	SHIELD		
6	NC		Reserved
7	NC		Reserved
8	NC		Reserved
9	NC		Reserved
10	NC		Reserved
13	SHIELD		
17	NC		Reserved
18	NC		Reserved
19	NC		Reserved
20	NC		Reserved
21	NC		Reserved
22	NC		Reserved

Table 5: Ethernet J4 Pin Out

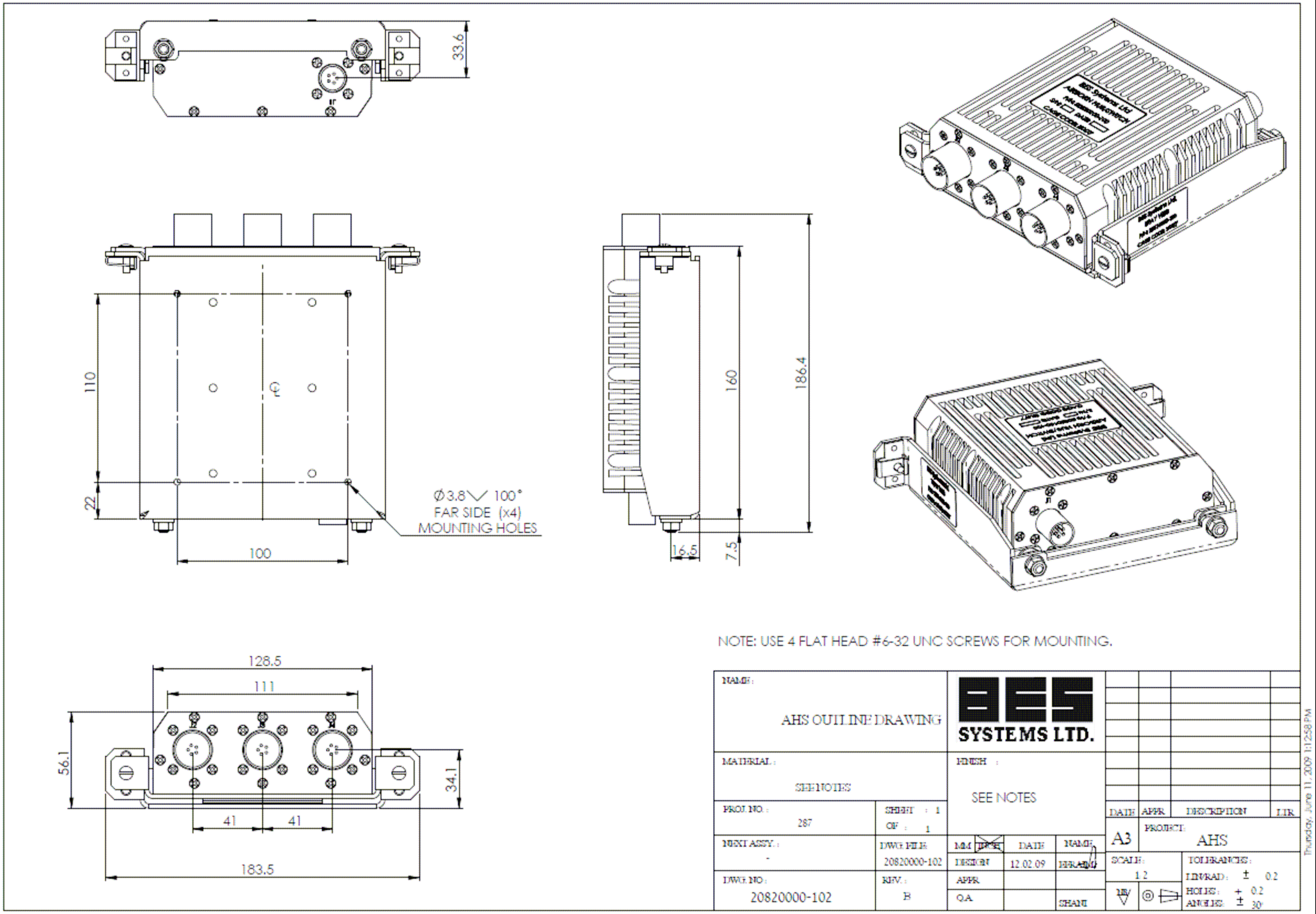

Figure 5-1 AHS OUTLINE